LT-700 Portable FM Display Transmitter

Don't miss a single sound. Listen®
www.listentech.com

The Listen LT-700 Portable Transmitter will broadcast your presenters or interpreters voice to everyone in the audience, without having to carry a microphone or be plugged into the wall. Excellent for factory tours, outdoor events, wireless microphone applications, classrooms, training sessions, or personal use – anywhere you need to amplify sound but don't have (or want) an installed sound system. Portable transmission has never been easier for users!

Configuration

LT-700-072
LT-700-216
LT-700-863

Highlights

- Superior Audio Quality – 80 dB (70 dB with 863 MHz) signal-to-noise ratio (SNR), setting the industry's sound quality standard.
- 57 channels (17 channels with 863 MHz).
- Look & Listen™ LCD shows channel, battery status, signal strength and programming information.
- 100 % Digital – Listen receivers are digitally-tuned so transmission won't drift.
- Programmability- Uneeded channels can be locked so this receiver will access only one or more channels of your choice.
- Uses standard alkaline or nickel-metal hydride (NiMH) batteries.
- Built in SmartCharge™ won't allow batteries to overcharge. Charging circuitry is conveniently built into Listen's LT-700.
- Drop in charging contacts for any of Listen's many charging cases or a charging plug on the side of the unit.
- Mute switch.
- Mic and/or line level inputs.
- Many accessory options make Listen products ideal for a wide range of applications
- Limited Lifetime Warranty with hassle-free support.

Used With:

LR-100-072 Stationary FM Receiver/Power Amplifier (72 MHz)
LR-100-216 Stationary FM Receiver/Power Amplifier (216 MHz)
LR-400-072 Portable Display FM Receiver (72 MHz)
LR-400-216 Portable Display FM Receiver (216 MHz)
LR-400-863 Portable Display FM Receiver (863 MHz)
LR-500-072 Portable Programmable Display FM Receiver (72 MHz)
LR-500-216 Portable Programmable Display FM Receiver (216 MHz)
LR-500-863 Portable Programmable Display FM Receiver (863 MHz)
LR-600-072 Wireless FM Receiver/Speaker (72 MHz)
LR-600-216 Wireless FM Receiver/Speaker (216 MHz)

Includes:

LT-700 Portable Display FM Receiver
Owner's manual (72 MHz & 216 MHz)
Quick reference card (863 MHz)
Limited Lifetime Warranty Program Card (863 MHz)
FM System Design Guide and Manual Card (863 MHz)

Architectural Specifications

LT-700-072/216
The portable FM transmitter shall be capable of broadcasting on 57 wide and narrow band channels. The transmitter shall have a SNR of 80 db or greater. The unit shall incorporate a microphone sensitivity switch. Channel tuning shall be capable of being locked. The device shall have an audio frequency response of 50 Hz to 15 KHz (±3 dB) at 72 MHz or of 50 Hz to 10 kHz (±3 dB) at 216 MHz. The device will incorporate a mute switch. The battery door shall be capable of being mechanically locked. The device shall incorporate an LCD display that indicates channel, programming, battery level, low battery, battery charging, RF signal strength and channel lock status. The unit shall operate off of two (2) AA batteries; alkaline or NiMH. The transmitter shall incorporate automatic battery charging circuitry for recharging of NiMH batteries. The device shall have a switchable option for the use of alkaline or NiMH batteries. The Listen LT-700-072 or LT-700-216 is specified.

LT-700-863
The portable FM Transmitter shall be capable of broadcasting on 17 wide band channels. The transmitter shall have a SNR of 70 db or greater. The unit shall incorporate a microphone sensitivity switch. Channel tuning shall be capable of being locked. The output power shall be adjustable to quarter, half or full. The device shall have an audio frequency response of 50 Hz to 15 KHz (±3 dB). The device shall incorporate a mute switch. The battery door shall be capable of being mechanically locked. The device shall incorporate an LCD display that indicates channel, programming, battery level, low battery, battery charging, RF signal strength and channel lock status. The unit shall operate off of two (2) AA batteries; alkaline or NiMH. The transmitter shall incorporate automatic battery charging circuitry for recharging of NiMH batteries. The device shall have a switchable option for the use of alkaline or NiMH batteries. The Listen LT-700-863 is specified.

Requires:

Requires a microphone and (2) AA batteries
LA-261 Lavalier Microphone
LA-262 Over-the-Head Microphone
LA-270 Noise Canceling Microphone (72 MHz & 216 MHz only)
LA-272 Over-the-Head Microphone w/Earphone
LA-274 Hand Held Microphone
LA-276 Collar Microphone
LA-277 Conference Microphone
LA-278 Behind-the-Head Microphone
LA-279 Over-the-Ear Microphone - Presentation Style (72 MHz & 216 MHz only)
LA-361 High Capacity AA Alkaline Batteries (2)
LA-362 Rechargeable AA NiMH Batteries (2)

Listen Technologies Corporation • 14912 Heritagecrest Way • Bluffdale • Utah 84065-4818 U.S.A.
+1.801.233.8992 • +1.800.330.0891 North America • +1.801.233.8995 Fax

Listen Technologies Corporation All rights reserved 91907

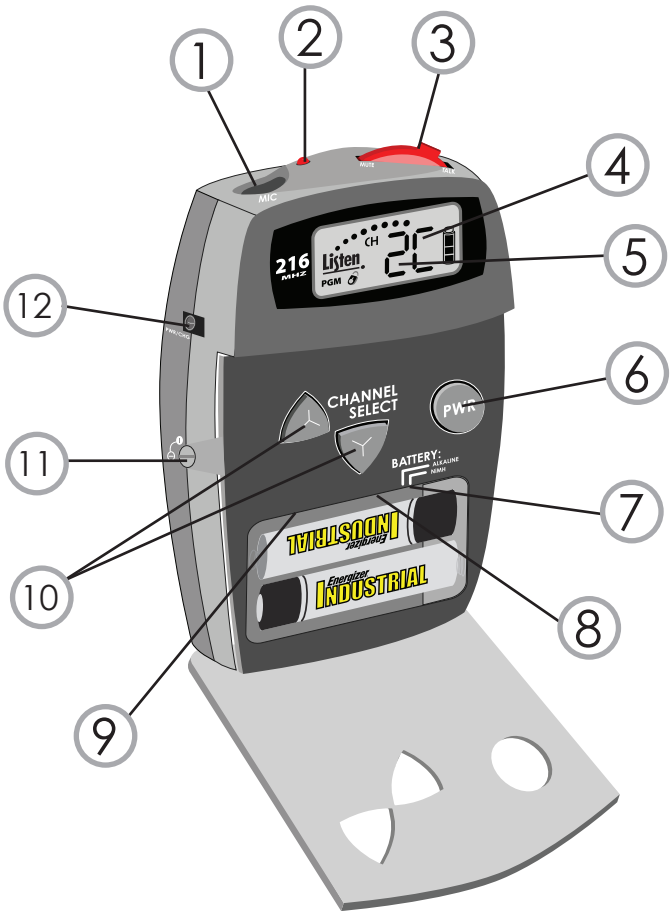

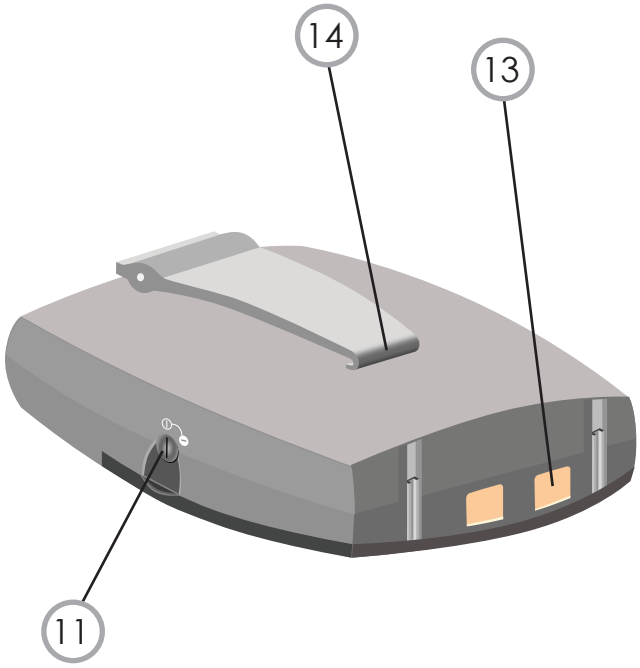

Product Features (LT-700-072 and LT-700-216)

1. A microphone or line level source (such as a CD or MP3 player) connects here. Use the LA-263 Line/Microphone "Y" Cable (72 MHz and 216 MHz) to connect an audio device with your microphone. Transmitter antenna is built into the microphone cord, eliminating additional wires while maximizing transmission effectiveness.
2. Multifunction LED indicates when power is on, microphone is muted, if batteries are low, and charging status.
3. Easy access mute switch.
4. Look&Listen™ LCD Display shows channel selection, channel lock, and battery level.
5. Offers 57 channels, or can be programmed so that only the channels you are using are displayed.
6. Easy access POWER button.
7. Uses two (2) AA batteries. Adjustable to use either alkaline or NiMH batteries
8. When enabled, SQ technology provides the highest audio quality available in its product category. SQ can be disabled for compatibility with other assistive listening or tour group equipment.
9. Adjustable microphone sensitivity switch for best audio results.
10. UP/DOWN channel selection. Also used to lock and unlock channel selection to prevent accidental channel switching.
11. Manually lockable battery compartment door.
12. Single transformer charging plug port.
13. Contact points for Listen's drop in charging cases.
14. Exclusive belt clip "loop" prevents unit from slipping off belt or strap.

Listen Technologies Corporation • 14912 Heritagecrest Way • Bluffdale • Utah 84065-4818 U.S.A.
+1.801.233.8992 • +1.800.330.0891 North America • +1.801.233.8995 Fax
Listen Technologies Corporation All rights reserved 91907

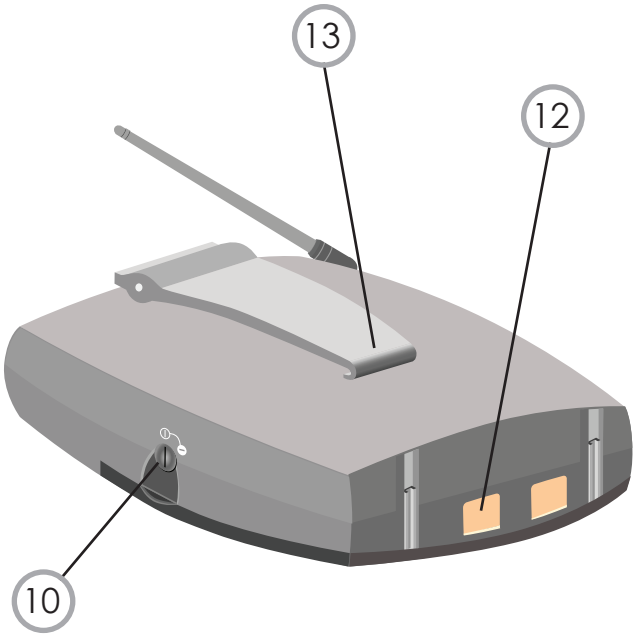

Product Features (LT-700-863)

1. A microphone or line level source (such as a CD or MP3 player) connects here. Transmitter antenna is built into the microphone cord, eliminating additional wires while maximizing transmission effectiveness.
2. Multifunction LED indicates when microphone is muted, if batteries are low, if the transmitter is locked on a channel and charging status.
3. Easy access mute switch.
4. Look&Listen™ LCD Display shows channel selection, channel lock, and battery level.
5. Offers 17 channels, or can be programmed so that only the channels you are using are displayed.
6. Easy access POWER button.
7. Uses two (2) AA batteries. Adjustable to use either alkaline or NiMH batteries.
8. Adjustable microphone sensitivity switch for best audio results.
9. UP/DOWN channel selection. Also used to lock and unlock channel selection to prevent accidental channel switching.
10. Manually lockable battery compartment door.
11. Single transformer charging plug port.
12. Contact points for Listen's drop in charging cases.
13. Exclusive belt clip "loop" prevents unit from slipping off belt or strap.

Listen Technologies Corporation • 14912 Heritagecrest Way • Bluffdale • Utah 84065-4818 U.S.A.
+1.801.233.8992 • +1.800.330.0891 North America • +1.801.233.8995 Fax
Listen Technologies Corporation All rights reserved 91907

Accessories

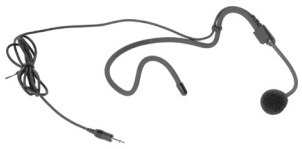

LA-278

Microphones

LA-261 Lavalier Microphone
LA-262 Over-the-Head Microphone
LA-270 Noise Canceling Microphone (72 MHz & 216 MHz only)
LA-272 Over-the-Head Microphone w/Earphone
LA-274 Hand Held Microphone
LA-276 Collar Microphone
LA-277 Conference Microphone
LA-278 Behind-the-Head Microphone
LA-279 Over-the-Ear Microphone - Presentation Style (72 MHz & 216 MHz only)

LA-263

Cables

LA-263 Line/Mic Y Input Cable for LT-700 (72 MHz and 216 MHz only)
LA-275 Portable Unit Sacrificial Cable

LA-321

Charging/Carrying Cases

LA-311-01 16-Unit Portable FM Product Charging/Carrying Case (North America)
LA-311-02 16-Unit Portable FM Product Charging/Carrying Case (Asia/UK)
LA-311-03 16-Unit Portable FM Product Charging/Carrying Case (Europe)
LA-317-01 4-Unit Portable FM Product Charging/Carrying Case (North American)
LA-317-02 4-Unit Portable FM Product Charging/Carrying Case (Asia/UK)
LA-317-03 4-Unit Portable FM Product Charging/Carrying Case (Europe)
LA-321-01 8-Unit Portable FM Product Charging/Carrying Case (North America)
LA-321-02 8-Unit Portable FM Product Charging/Carrying Case (Asia/UK)
LA-321-03 8-Unit Portable FM Product Charging/Carrying Case (Europe)

LA-324

Charging/Carrying Cases with Removable Lid

LA-323-01 4-Unit Portable FM Product Charging/Carrying Case (North America)
LA-323-02 4-Unit Portable FM Product Charging/Carrying Case (Asia/UK)
LA-323-03 4-Unit Portable FM Product Charging/Carrying Case (Europe)
LA-324-01 8-Unit Portable FM Product Charging/Carrying Case (North America)
LA-324-02 8-Unit Portable FM Product Charging/Carrying Case (Asia/UK)
LA-324-03 8-Unit Portable FM Product Charging/Carrying Case (Europe)
LA-325-01 16-Unit Portable FM Product Charging/Carrying Case (North America)
LA-325-02 16-Unit Portable FM Product Charging/Carrying Case (Asia/UK)
LA-325-03 16-Unit Portable FM Product Charging/Carrying Case (Europe)

LA-361

Miscellaneous

LA-304 Assistive Listening Notification Signage Kit
LA-306 Soft Case
LA-319 Protective Pouch for Portable FM Products
LA-320 Configurable Carrying Case
LA-330 Portable Unit Lanyard
LA-361 High Capacity AA Alkaline Batteries (2)
LA-362 Rechargeable AA NiMH Batteries (2)
LA-202 Power/ Charging Supply for FM Portable Products (72MHz & 216 MHz only)

Listen Technologies Corporation • 14912 Heritagecrest Way • Bluffdale • Utah 84065-4818 U.S.A.
+1.801.233.8992 • +1.800.330.0891 North America • +1.801.233.8995 Fax
Listen Technologies Corporation All rights reserved 91907

Don't miss a single sound. Listen®
www.listentech.com

Specifications LT-700-072/216

	Specifications	LT-700-072	LT-700-216
RF	RF Frequency Range	72.025 - 75.950 MHz	216.0125 - 216.9875 MHz
	Number of Channels	17 wide band, 40 narrow band	19 wide band, 38 narrow band
	Frequency Accuracy	± .005% stability 32 to 122 °F (0 to 50 °C)	
	Transmitter Stability	50 PPM	
	Transmitter Range	From 0 to 50 ft. (15.2 m) to 150 ft. (45.7 m)	
	Output Power	Less than 10 mW (72 MHz)	Less than 100 mW (216 MHz)
	Antenna	Microphone cable	
	Compliance	FCC Part 15, Part 90, Industry Canada, RoHS	
		** All system specifications are wireless end-to-end	

Audio	System Frequency Response	50 Hz - 15 kHz (±3 dB) 72 MHz	50 Hz - 10 kHz (±3 dB) 216 MHz
	System Signal to Noise Ratio	SQ enabled; 80 dB; SQ disabled 60 dB	
	System Distortion	<2% total harmonic distortion (THD) at 80% deviation	
	Microphone Input	Unbalanced, ring of 3.5mm connector, (-10dB nominal input level adjustable, +4dbu maximum, impedence 10k Ohms)	
	Microphone Sensitivity	Three position switch: high, middle, and low; 6 dB increments	
	Line Input	Unbalanced, ring of 3.5 mm (0.14 in.) connector, -10 dBu nominal, impedance 10k ohm	
	Microphone Power	3 VDC Bias	

Controls	User Controls	Power, mute, channel UP/DOWN
	Set-up Controls (battery compartment)	Mic sensitivity, NiMH/alkaline battery, SQ enable/disable
	Programming	Channel Lockout, Channel lock

Indicators	LED	Red, illuminated when unit is on. Flashes when batteries are low, or to indicate charging. Flashes when muted.
	Display	Channel designation, programming, battery level, battery charging, RF signal strength and channel lock

Power	Battery Type	Two (2) AA batteries, Alkaline or NiMH
	Battery Life (Listen batteries)	15 hours alkaline (LA-361), 8 hours NiMH rechargeable (LA-362)
	Battery Charging (NiMH only)	Fully Automatic, 13 hours
	Power Supply	I/P 120V AC; O/P 7.5VDC 250mA; Drop in contact points for use with charging cases. Power supply not included (LA-202)
	Power Supply Connector	.09 In (2.3 mm) OD by .7 mm ID, barrel type connector. 7.5 VDC, center positive <250 mA. Drop in contact points for use with Listen charging cases.
	Power Supply Compliance	RoHS, WEEE, UL, PSE, CE, CUL, TUV, CB compliant

Physical	Dimensions (H x W x D)	4.25 x 2.75 x 1.50 in. (10.8 x 7.0 x 3.8 cm)
	Color	Dark Grey with white silk screening
	Unit Weight	3.9 oz (111 g)
	Unit Weight with batteries	5.8 oz (164 g)
	Shipping Weight	1.0 lbs. (453 g)
	Door	Manually lockable, controls accessible through doors

Environmental	Temperature - Operation	14˚ to 104˚F (-10˚ to 40˚ C)
	Temperature - Storage	-4 to 122˚F (-20 to 50˚ C)
	Humidity	0 to 95% Relative Humidity, non condensing

**Specifications are subject to change without notification

Listen Technologies Corporation • 14912 Heritagecrest Way • Bluffdale • Utah 84065-4818 U.S.A.
+1.801.233.8992 • +1.800.330.0891 North America • +1.801.233.8995 Fax
Listen Technologies Corporation All rights reserved 91907

	Specifications	LT-700-863
RF	RF Frequency Range	863.050 - 864.950 MHz
	Number of Channels	17 Wideband
	Frequency Accuracy	+/-.005% stability 32 to 122˚ (0- 50˚C)
	Transmitter Stability	50 PPM
	Transmission Range	0 m (0 ft.) to 76.2 m (250 ft.)
	Output Power	10mW maximum (adjustable)
	Antenna	Integrated external antenna
	Compliance	CE, ETSI, RoHS
		** All system specifications are wireless end to end **
Audio	System Frequency Response	50Hz - 15kHz (+/-3db)
	System Signal to Noise Ratio	70db (A-Weighted)
	System Distortion	<2% total harmonic distortion (THD) at 80% deviation
	Microphone Input	Unbalanced, tip of 3.5 mm (0.14 in.) connector, -20 dBu nominal, impedance 21k ohm
	Microphone Sensitivity	Three position switch: high, middle, and low; 6 dB increments
	Line Input	Unbalanced, ring of 3.5 mm (0.14 in.) connector, -10 dBu nominal, impedance 10k ohm
	Microphone power	3VDC Bias
Controls	User Controls	Power, mute, channel up/down
	Set-up Controls (battery compartment)	Mic sensitivity, NiMH/alkaline battery
	Programming	Channel lock out, Channel lock
Indicators	LED	Red, illuminated when unit is on. Flashes when batteries are low, or to indicate charging. Flashes when muted.
	Display	Channel Designation, lock status, signal strength indication, battery life, RF power
Power	Battery Type	Two (2) AA batteries, Alkaline or NiMH
	Battery Life (Listen batteries)	10 hours alkaline (LA-361), 6 hours NiMH rechargeable (LA-362)
	Battery Charging (NiMH only)	Fully Automatic, 13 hours
Physical	Dimensions (H x W x D)	10.8 x 7.0 x 3.8 cm (4.25 x 2.75 x 1.50 in.)
	Color	Dark Grey with white silk screening
	Unit Weight	111 g (3.9 oz)
	Unit Weight with batteries	164 g (5.8 oz)
	Shipping Weight	453 g (1 lbs,)
	Door	Manually Lockable. Up, down, and power buttons through door. Other controls behind door
Environmental	Temperature - Operation	-10 to 40 °C (14 to 104 °F)
	Temperature - Storage	-20 to 50 °C (-4 to 122 °F)
	Humidity	0 to 95% Relative humidity, non condensing

**Specifications are subject to change without notification

Listen Technologies Corporation • 14912 Heritagecrest Way • Bluffdale • Utah 84065-4818 U.S.A.
+1.801.233.8992 • +1.800.330.0891 North America • +1.801.233.8995 Fax
Listen Technologies Corporation All rights reserved 91907

Frequently Asked Questions

Q What is the range of the LT-700 portable transmitter?

A Line of site up to 150 ft. (45.7m) for both 72 MHz and 216 MHz.
Line of site up to 250 ft. (76.2m) for 863 MHz.

Q Can I have multiple transmitters operating in one facility?

A Yes. You can have multiple transmitters operating in one area on different channels, however more than one transmitter cannot be used on the same channel.

Q Can I use a line source with the portable transmitter?

A Yes. Listen offers a mic/line input cable (LA-263) for this use. (72 MHz and 216 MHz only)

Q How long do the batteries last on the portable transmitter?

A Alkaline batteries last 20 hours. NiMH rechargeable batteries last 8 hours on 72 MHz and 216 MHz. Alkaline batteries last 10 hours; NiMH rechargeable batteries last 6 hours on 863 MHz.

Q Does the LT-700 provide phantom power?

A Yes. 3VDC

Q Will the LT-700 portable transmitter work for two-way communication?

A No. Listen does not recommend a two-way system for tour group applications. A two-way system means that everyone hears every sniffle, cough, comment, etc. The tour guide loses control of the tour and the tour becomes unproductive.

Listen Technologies Corporation • 14912 Heritagecrest Way • Bluffdale • Utah 84065-4818 U.S.A.
+1.801.233.8992 • +1.800.330.0891 North America • +1.801.233.8995 Fax
Listen Technologies Corporation All rights reserved 91907